RUBINETTERIA RINALDI
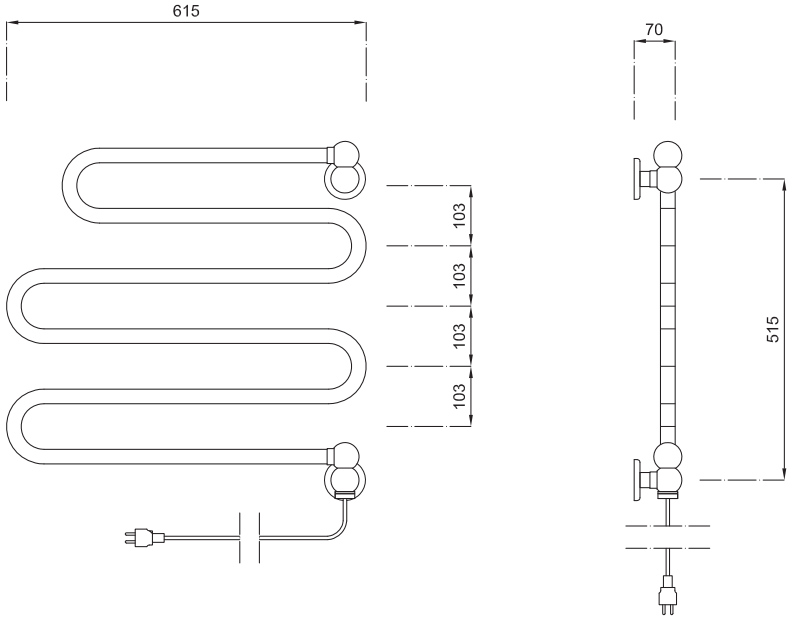
Maxi - Art. 103 Electric